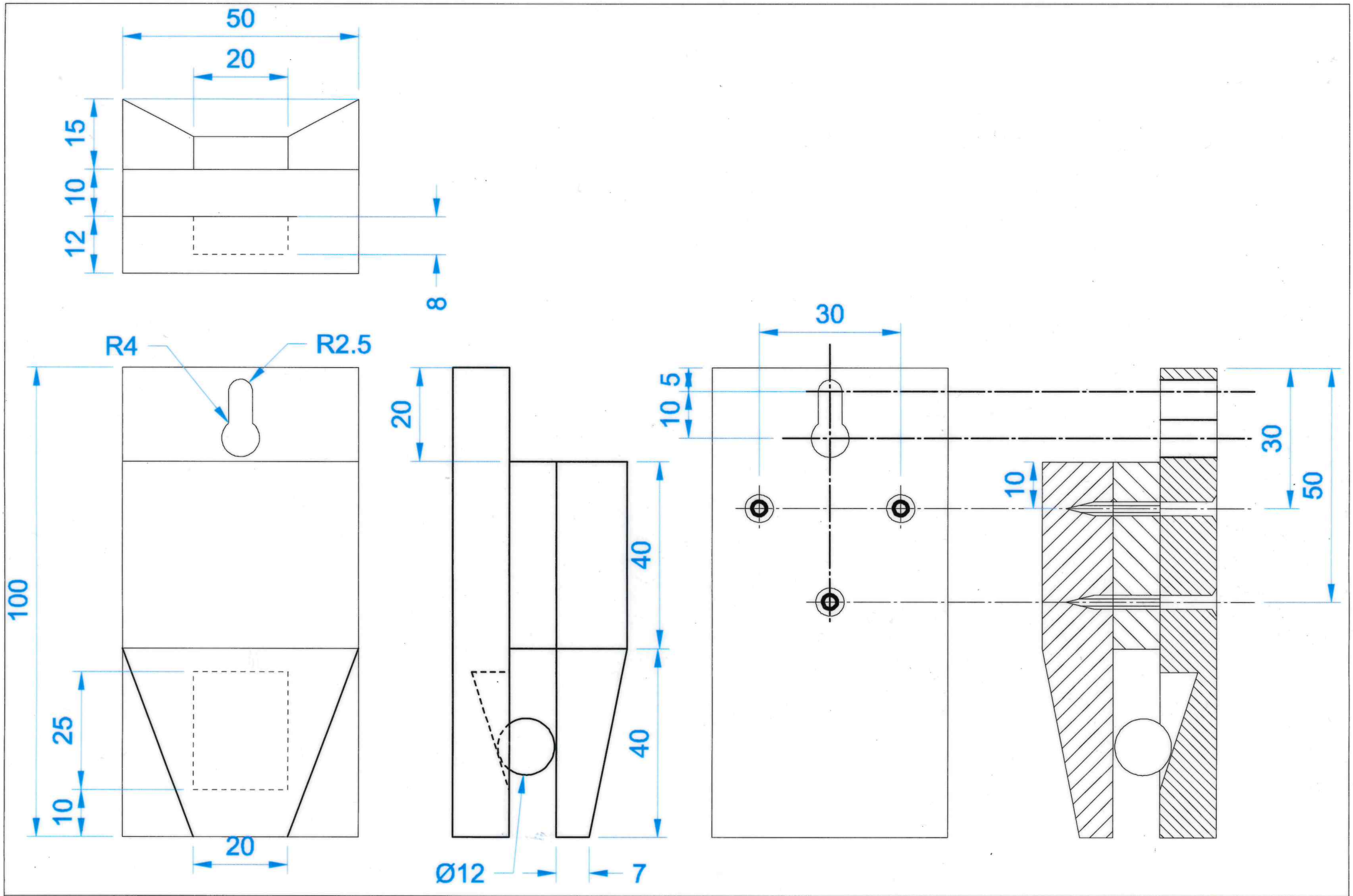

NOTEHOLDER ORTHOGRAPHIC : ASSEMBLED PRODUCT